Fifty Years OF RTTY

$5.00 SPRING, 2002 VOL. 50, NO. 1

RYRYRYRYRYRYRYRYRYRYRYRYRYRYRYRYRYRYRYRYRYRYRYRYRYRYRYRYRYRYRYRYRYRYRYRYRYRYRYRYRYRYRYRYRYRYRYRYRYRYRYRYRY

CONTENTS

Spring and Summer Contest Schedule - - - - - - - - - - - - - 2
Hits & Misses - 3
RTTY Scope - 4
Biography: K4WW - 9
Biography: W2UP - 10
2002 CQ/RJ WW DX Plaque Winners and Sponsors - - - - 10
Website Reviews - 11
Dayton 2002 Update - 12
Armed Forces Day - 13

P38

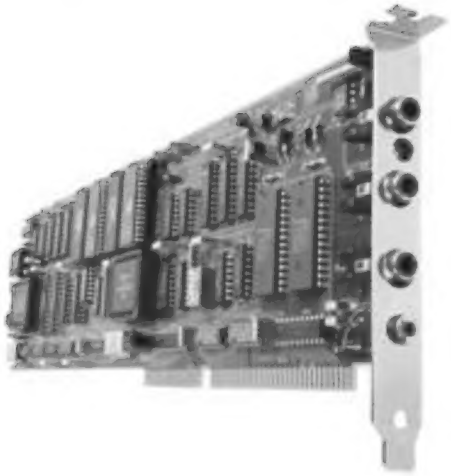

The P 3 8 is a multi-mode HF data modem that gives you top performance operation using RTTY, AMTOR, P-Mode* and CLOVER-II waveforms. The P 3 8 is a full sized plug-in card for PC-AT and faster personal computers. Multi-screen menu-driven HAL software is included with each P 3 8 modem. Many popular "third-party" user programs are also available for the P 3 8 - W0RLI, WINLINK, WriteLog, XPWARE, EZTERM and RTTY by WF1B. The P 3 8 is complete and ready to run. Plug in the board, connect three phono cables to your radio, and install the software. That's all there is to it! Whether you want to rag-chew, chase DX, or access electronic mail, the P 3 8 is the modem of choice.

RTTY-1

The HAL **RTTY-1** is an easy to use and very accurate tuning indicator. It may be used with virtually *any* FSK modem, TNC, multi-mode controller, demodulator, and receiver or transceiver. The crossed LED bars show correct tuning for all popular FSK modes including Baudot Teletype (RTTY), ASCII Teletype, AMTOR, SITOR, P-Mode*, and even HF Packet Radio. Just hook it to your receiver's audio output and you're in business, even with modems that do not include "scope" output connectors.

*The word "P-Mode" is the HAL designation for a communications protocol that may be also known as "Pactor" a registered trademark of the Spezielle Communications System GmbH (SCS) firm in Hanau, Germany. HAL affirms that, to the best of its knowledge, "P-Mode" is compatible and interoperable with the protocol SCS calls "Pactor" and with the link establishment and weak signal modes of the protocol SCS calls "Pactor-II".

HAL COMMUNICATIONS CORP.
1201 West Kenyon Road, P.O. Box 365
Urbana, IL 61801-0365
Phone: (217) 367-7373 FAX (217) 367-1701
www.halcomm.com halcomm@halcomm.com

RTTY Contest Schedule — Spring/Summer 2002

Date & Time	Contest	Date & Time	Contest	Contest Information Online
4/27 1200 to	SPDX RTTY	5/17 1800 to	Anatolian	ARRL: http://www.arrl.org
4/28 1200		5/18 2100	WW RTTY	Jim's Gazette: http://www.n2hos.com/digital
				LA9HW Contest Calendar: http://home.online.no/~janalme/hammain.html
5/4 2000 to	ARI Int'l DX	6/8 0000 to	ANARTS	SM3CER Contest Service: http://www.sk3bg.se/contest
5/5 2000		6/10 0000	WW RTTY	The New RTTY Journal: http://www.rttyjournal.com/contests
5/11 1200 to	Volta RTTY	6/22 1800 to	ARRL	
5/12 1200		6/23 2100	Field Day	OR — The New RTTY Journal will airmail a printed copy to you. For *each contest,* send $3.00 for U.S., Canada, or Mexico destinations or $4.00 to other countries. Please allow three weeks for processing and delivery.

Dates and times subject to change.

The New
RTTY *Journal*®

George W. (Bill) Henry, K9GWT
Publisher and Editor

All Correspondence:
The New RTTY Journal
P.O. Box 236
Champaign, IL 61824-0236

Voice: 217-367-7373
FAX: 217-367-1701
www.rttyjournal.com

STAFF

Linda Henry .....Accountant

Joe Wittmer, KB9SIZ.....Assistant Editor
jwittmer@rttyjournal.com

Dale Sinner, W6IWO .....Associate Editor
dsinner@rttyjournal.com

Jason Allen .....Production Manager
jallen@rttyjournal.com

The New RTTY Journal is published four times per year: March, June, September, and December. Subscriptions and advertisements must be pre-paid by check or money order in U.S. funds drawn on U.S. banks only. Visa and MasterCard credit cards are accepted.

The publisher assumes no liability or responsibility for errors, omissions or editorial content. Written permission from the publisher of The New RTTY Journal is required prior to and for any reproduction of all or any portion of this magazine.

Expiration Date: Your address label shows the date of your last subscription issue. Please contact us if this does not agree with your calculations.

POSTMASTER: Please send all address changes to: The New RTTY Journal, P.O. Box 236, Champaign, IL 61824-0236

The New RTTY Journal is a continuation of the magazine formerly known as RTTY, RTTY Journal, RTTY Digital Journal, Digital RTTY Journal, and Digital Journal.

Hits & Misses

Bill Henry, K9GWT
k9gwt@rttyjournal.com

It's finally spring again and no doubt many of us are stringing wires — or at least planning where we might string them when (and if) we get the energy. Roy Maul has a tag line on his email — "Keep West Virginia Beautiful — Grow Aluminum". I like the sentiment.

Spring also brings the annual trek to Dayton, Ohio for the Dayton Hamvention. I've been to every one since 1965 or so. I am not sure what I'd do in late April or mid-May if I didn't go. For whatever reason, advance interest in the hamvention seems to be lagging behind this year. Our room reservations are not up to where they've been for the last 10 to 15 years. This may be due to the September 11, 2001 attack, to budget problems, or maybe to confusion over yet another hotel change for the RTTY crowd. Whatever the reason, please reconsider coming to join us and write, email, or call Dale to nail down your room and banquet reservations.

The new hotel is very nice and for the first time we have a very wide assortment of good restaurants to choose from. In October, Linda and I found the following at our Interstate Exit: Arby's, Bennigan's, Bob Evan's, Cookers, Cracker Barrel, Max and Erma's, Olive Garden, Perkins, Red Lobster, Ryan's, Subway, and Wendy's — all at Exit 60, Little York Road. There are more details and a complete map on page 12.

The 50th Anniversary issue struck a soft spot with many of our readers with more mail than we've had in a while. Comments ranged from "forgot I used to have hair" to "sure glad modern RTTY doesn't require all that hardware". We'll be running another RTTY Photo Gallery after the Dayton Hamvention in the next issue. Jason has a brand new digital camera. Make sure he gets your mug in at least one photo.

This issue contains "yet one more scope article". This time around, Dale Sinner has cooked-up a real scope that he has actually built. You don't see very many construction articles in ham journals these days and Dale and I thought this might be an appropriate RTTY Journal article for the "new millennium." Dale had a lot of fun with this one. He tells me that he plans to bring the "real thing" to Dayton this year for everyone to peruse and critique.

Also, please note the article about Armed Forces Day on May 11, 2001. This IS the time to support our Americans in uniform. Get on the air and talk to some of the MARS stations. Frequencies, times, and stations are all listed.

The Dayton Hamvention is our next gathering and next month's issue will of course contain articles and photos about the fun and fellowship. Remember, find Jason and get your picture in the next issue!

— 73, Bill, K9GWT

RTTY *Journal*
ARCHIVE DISCS

All RTTY Journal issues, from 1953 to 1997, are available on CD-ROMs. Subscribers can buy the whole set of eight discs for just $100 (a savings of $20), or you may purchase each archive disc individually for $15 ($20 each for non-subscribers).

See the enclosed form for details on ordering.

RTTY Scope

Dale Sinner, W6IWO
dsinner@rttyjournal.com

Ya, I know what you are thinking. Here we go again. You are right up to a point. You see, I have been messing with these things for years now and I'm always looking for a way to improve on the last one. I built my first scope back in the eighties. It was a transistorized job, but it used too many parts. It worked fine and I used it for a few years. Then I built a transistorized LED tuning scope. It worked fine also but again I was still looking for the ultimate. Of course, it would be really easy just to buy an old dual trace oscilloscope and use it. But, most of them are big boat anchors and look ugly. Or one could buy and ST-8000 with it's fine scope tuner but that is little bit out of my class, money wise. One could also build one of the many scope projects that have appeared in the journal over the years. But that still would not do for me. So, here we go again.

Last year at Dayton I broached this idea to Bill Henry, K9GWT, (our publisher, among other titles) and asked him for a circuit design. I did this since he has untold knowledge of scopes that has evolved over the years. After much thought, contemplation, and arm twisting he agreed. The plan was for him to design and I build and test. Soon we were exchanging e-mails faster than a speeding bullet with the result a circuit first draft. Let me digress for a moment. In order to do this, I wanted something a guy could build inexpensively using some parts from his junk box. CRTs are hard to come buy and so one must secure a CRT from surplus store or a friend, etc. This particular scope is designed for a 3" CRT but a 2" can also be used with slight modification. I also wanted just a transistorized circuit and Bill complied but added a circuit using tubes (a future article). The other consideration was the power transformer. So Bill came up with a circuit using inexpensive low voltage transformers. Now we were getting somewhere!

In my junk box I had a couple of 3" CRTs and a 2" CRT so I could go either way. I chose the 3" CRT circuit. Bill found some transformers from an outfit in Los Angles which were suitable and cheap. Thanks to him I was able to come up with parts quickly. Now it was time for the breadboard project. I chose to do the power supply separate from the electronics so two perf boards were used. This circuit also assumes that you have suitable mark and space tones to feed it. More on this later. There are two schematics involved here. One is the power supply and the other the electronics. Bill has agreed to write the power

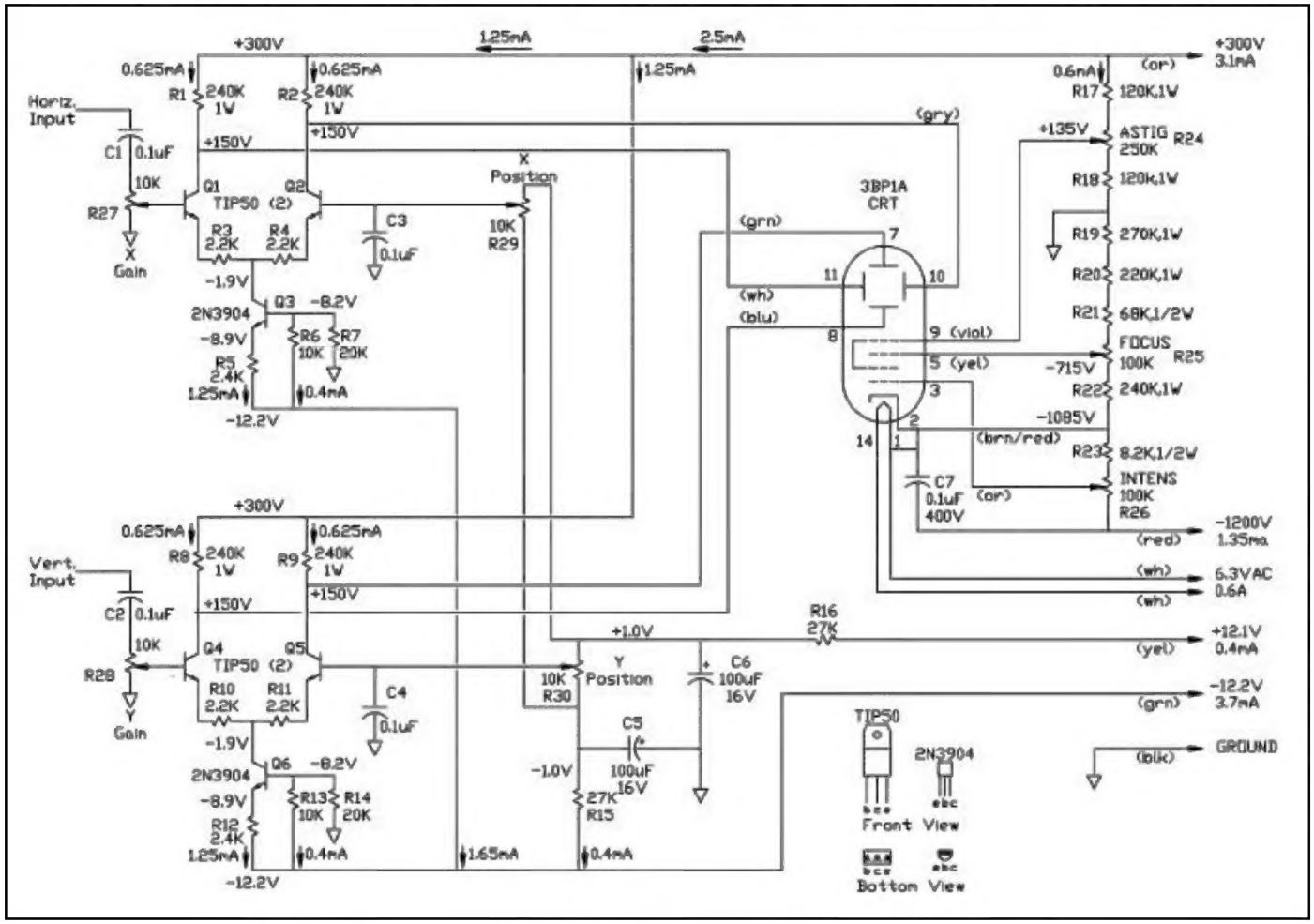

Figure 1: RTTY Scope Main Schematic

supply portion of this article while I write the electronics board portion.

The 3" 3BP1 CRT was what I had on hand and therefore the circuit is for this tube. Other 3" tubes will also work. The electronics schematic is shown in Figure 1 and the board is shown in Figure 2. For ease of construction I placed all the controls on the board but on the finished project (another article) I will have the controls on the front panel. Maybe not the Astig or Focus controls since once set, these voltages will probably remain constant. Be especially careful with these two controls and use insulated shafts if going to the front panel. Both have very high voltages on them. Both the electronics and power supply boards are 4 1/2" X 6" perf boards available from Radio Shack. The other components were mostly purchased from commercial catalogs such as Mouser or Digi-Key. One watt resistors were used because of the voltages involved. Remember once you have finished this project be sure to use one hand in testing. There are some high voltages here and they can really bite. I encountered no particular problems with this circuit except the placement of a couple of parts which resulted in sending the whole project to Bill for a diagnosis. However, all was not for naught because we were able to get some great pictures for this article.

If you decide to build this project there are a few things you should know. We have included a parts list herein to help and wherever possible a source of supply. Be sure to use at least 500 volt rated wire for most connections except the HV wire (brown-red on the schematic), which should be a TV HV cable. The filaments should also be heavier wire especially if the power transformers are located away from the rest of the components. If you find a 3" tube and cannot find a socket for it, one can be made by breaking up old octal tube sockets. Solder the wires to the pins and then slide the pins onto the CRT.

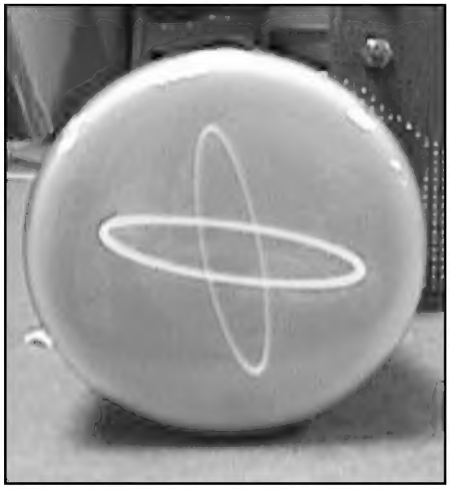

Figure 3: Scope Display

You may think these boards are very big and you are right. But, I had to no idea how much room I would need when I first started this project. However, once I remove the controls, I can then cut the electronics board to almost half of its present size. Figure 3 shows how well the unit works. Figure 4 shows the entire project. As you can see in figure 5, the power supply board can easily be halved. Figure 8 shows another view of the working model. Once you have both the circuits up and ready to run the next step is to check the voltages of the different parts of the circuit where shown on the schematic. Now if all goes well, it's time to supply the two tones (mark and space), and make your final adjustments. Congratulations, you now have a fine CRT tuning indicator that you built yourself.

Now back to the mark and space inputs. If you have mark and space output from a modem then there should be plenty of gain on the X and Y input controls. If you do not have mark and space inputs available then I suggest you build the tone filter circuit shown on page 7. This is what I use and it has served me well for all these years. This circuit takes the

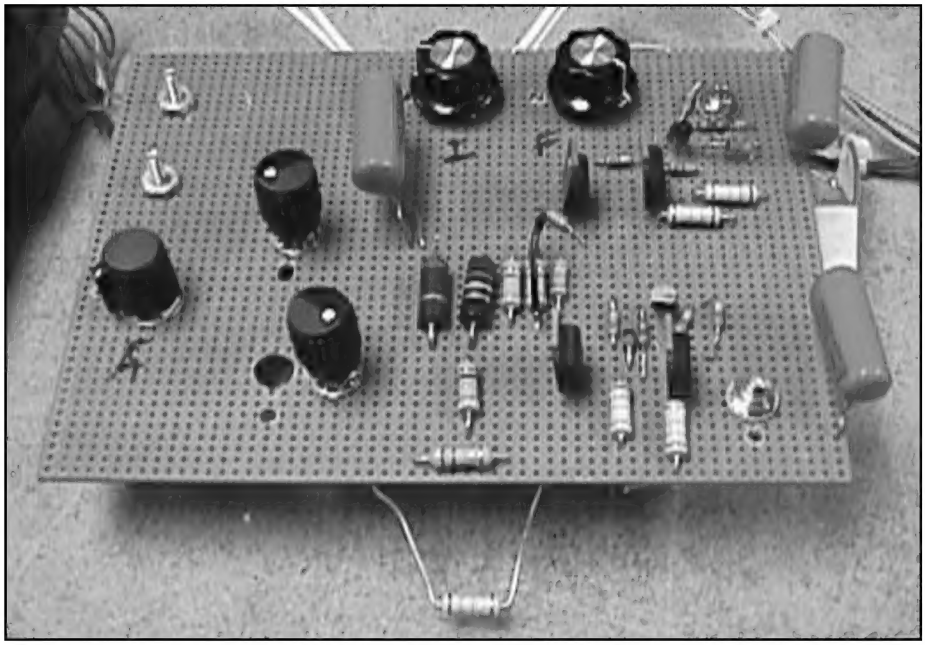

Figure 2: Scope Board

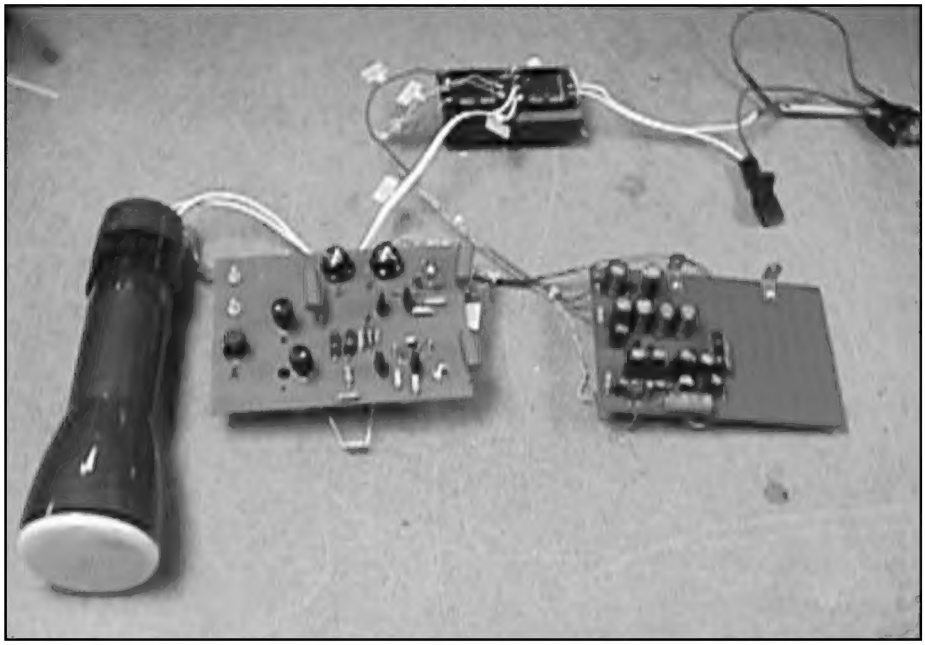

Figure 4: Completed Assembly

audio directly from the receiver then through two filters to come up with outputs for the two tones (2125-2295). I will incorporate this board into my new scope project as soon as I select a suitable cabinet to house this project. This project has been fun from the start even though I had a couple of problems which had to be solved. Time-wise, the circuit can be built in your spare time. I tried to keep track of the time but it got out hand when I had some trouble. Using the perf boards I chose, assembly was easy.

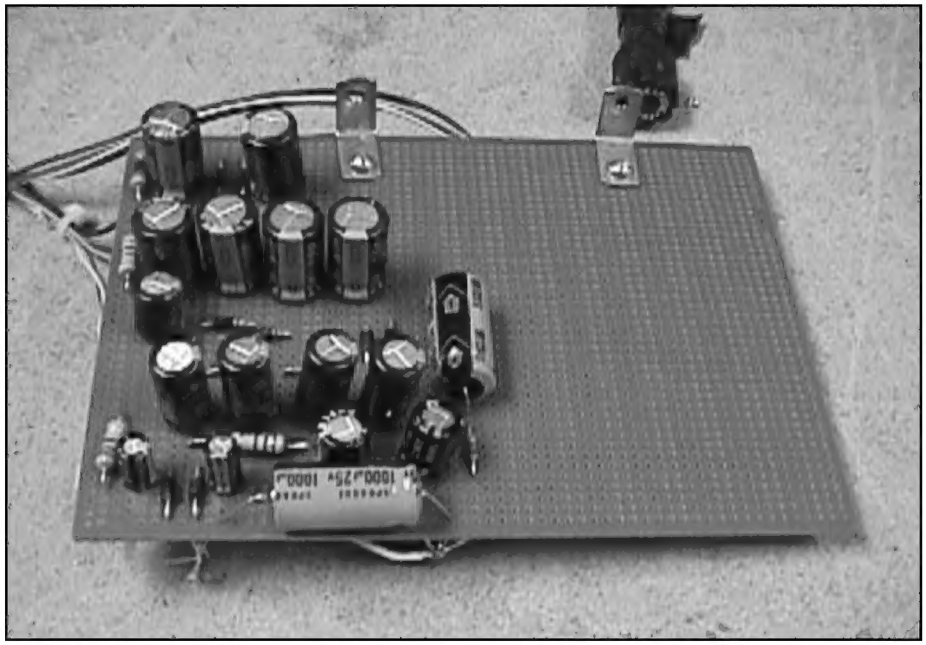

Figure 5: Power Supply Board

Have fun building this project and watch for my next article which will have the finished project. I also should be able to suggest a suitable cabinet by then.

— 73, Dale, W6IWO

Scope Power Supply
by Bill Henry, K9GWT

The power supply for Dale's RTTY Scope is as simple and low cost as possible. Special power transformers designed for oscilloscopes have not been available for many years. But, you still have to come up with a kilovolt or so to get the "green worm to wiggle". Figure 6 shows my solution.

Transformers T1 and T2 are identical dual primary / dual secondary jobs of the type you see for 120/240V solid state power supplies. These can be expensive but if you shop around, you might be surprised. The ones we

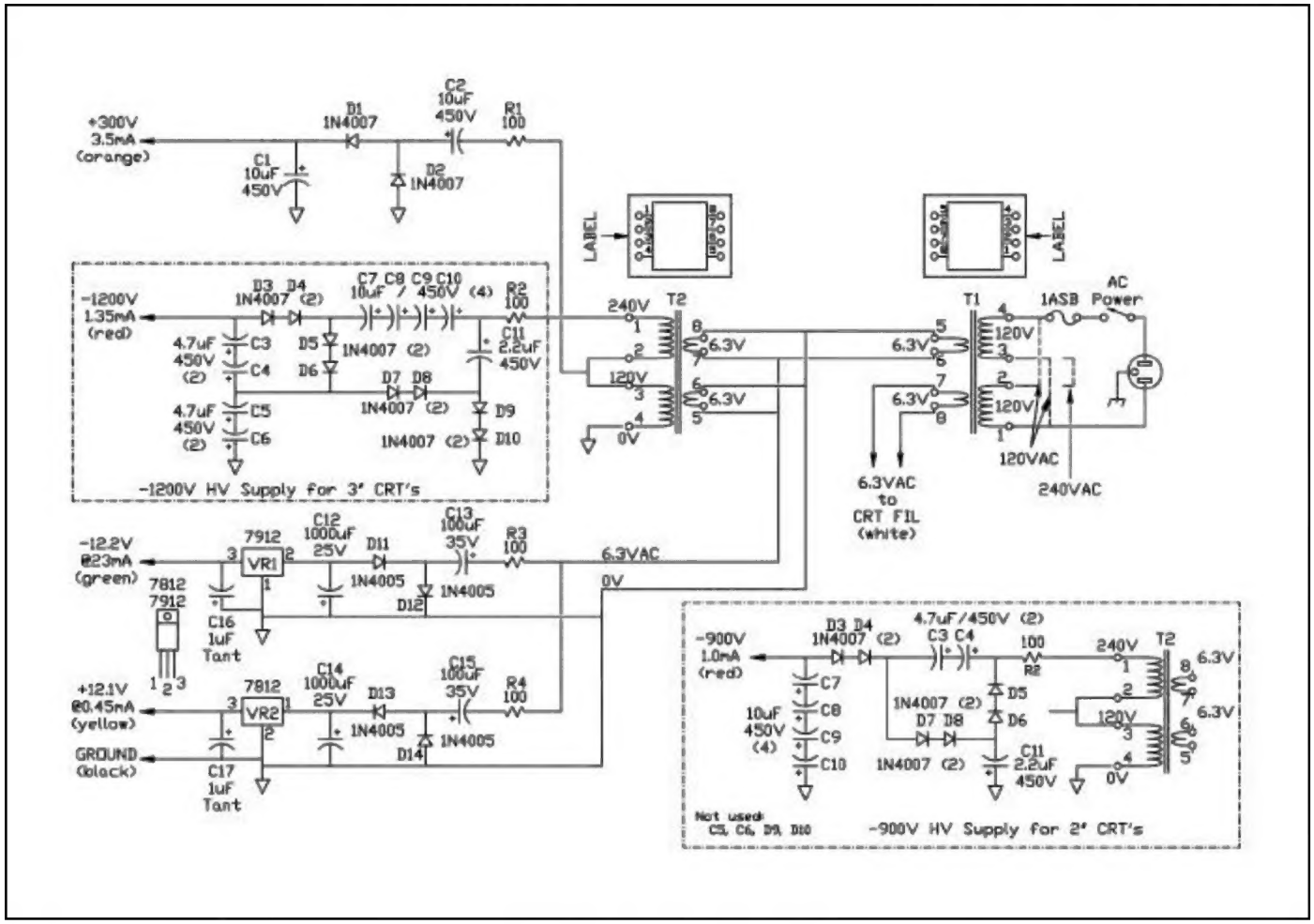

Figure 6: Power Supply Schematic

used came from ALL Electronics in L.A. and were about $3.50 each (see parts list). The dual 6.3V secondary is handy since this is just the voltage we need for the CRT filament — and 6VAC can also be used for LV DC supplies. Also note that this is an "international design" — the AC power input can be wired for use on 120 or 220 V mains.

The other problem part for HV power supplies is usually the filter capacitor. Here, I had a pleasant surprise as these 450V jobs are stock items at Digi-Key — and boy are they small! Also, they are not very expensive (about $.80 to $1.70 — that's very cheap for HV electrolytics).

The two power transformers are wired back-to-back to give isolation from the AC power mains and step-up the AC voltage to about 240VAC. Two versions of the HV supply are shown, one for 3" CRT's (-1200V) and one for 2" CRT's (-900V). The -1200V uses a voltage quadrupler and the -900V a voltage tripler. These are both low current circuits — great for scopes but don't expect to also power your linear from these outputs! The +300V supply for the deflection amplifiers is a voltage doubler from the 120 VAC winding. The LV supplies evolved. I tried a "cheap and dirty" version with unregulated +16V and -16V output but had problems with AC hum getting into the CRT amplifiers and also the green worm wanted to bob around on the screen if the power line had a glitch. Finally, I just put in a couple of 12V regulators and all those problems went away. This also gives you a source of +12V and -12V if you need to add the Mark and Space op-amp filters Dale mentioned.

Finally, a word about using different CRT's in Dale's circuit. All small electrostatic deflection scope tubes are similar but the optimum focus, intensity, and deflection voltages vary between tubes. The HV divider resistor values shown are optimum for Dale's 3BP1A. But you may need to "tweak" the divider resistor values to get a different tube type to work correctly. You can an idea of the differences by looking at the table I published on page 8 in the November, 1995 issue of The Digital Journal (available on CD ROM #8).

As Dale said, this is a "high voltage" circuit. Keep your eyes open — and one hand in your pocket!

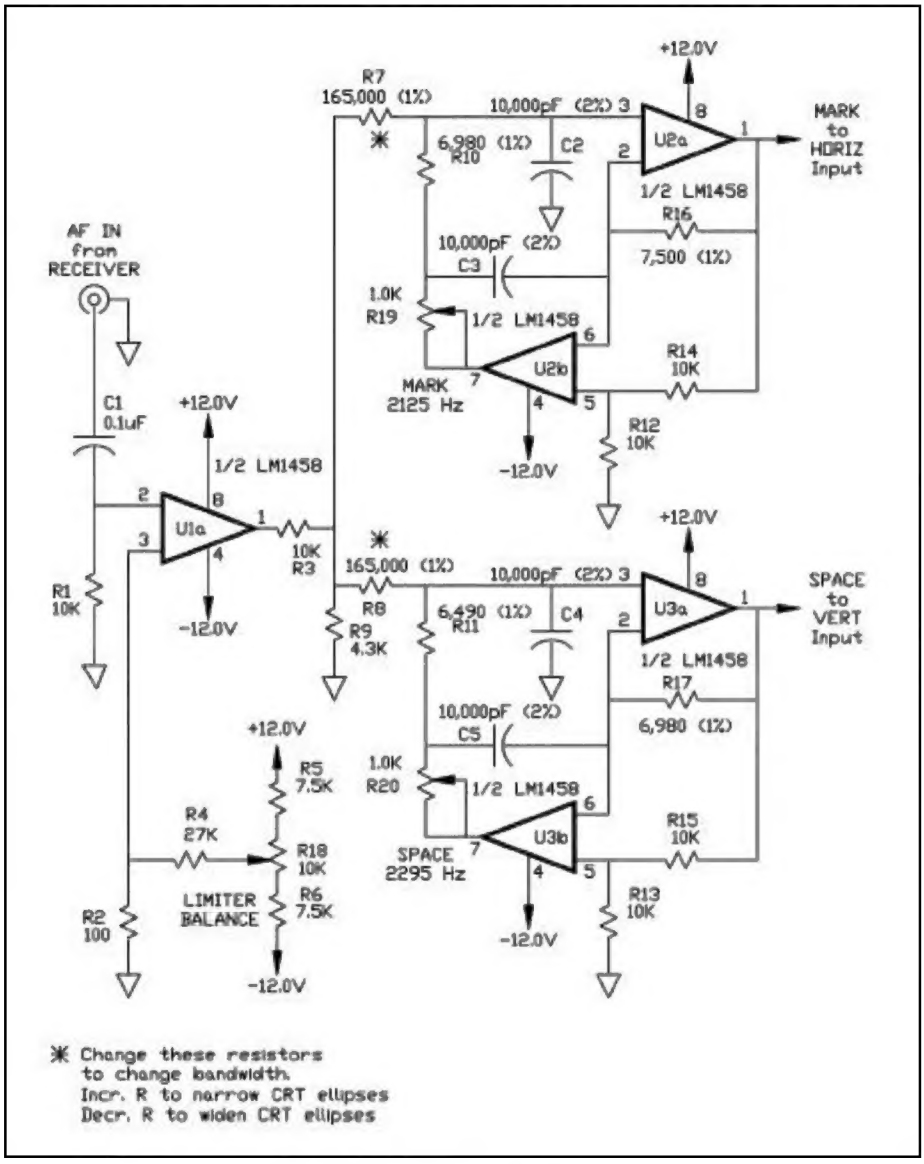

Figure 7: Mark/Space Filter Schematic

Mark / Space Filters for the RTTY Scope

If you have a modem that already has separate filtered audio outputs for Mark and Space, all you need to do is hook Mark to the horizontal input of the scope and Space to the vertical input. Modems such as the PK-232, many "computer interfaces", and older models such as the ST-6, ST-5, ST-5000, etc. all have Mark/Space or "Scope" outputs. However, many newer model modems do not have these output signals. This is especially true of DSP-technology modems such as the P-38, PCI-4000, DXP-38, DSP-4100 as well as all computer sound-card software systems. In this case, you will need to add the following circuit so that you can use the RTTY Scope.

The M/S Filter circuit is in fact the front-end of a simple demodulator. Integrated circuit U1a is an amplitude limiter stage. This drives two "tuned circuits" — or at least the op-amp bandpass filter equivalent of a tuned circuit. One bandpass filter (U2) is tuned to the Mark frequency (2125Hz) and the other (U3) to the Space tone (2295Hz). Resistors R16 and (R10 +R19) set the center frequency of the Mark filter to 2125 Hz. Similarly, R17 and (R11+R20) set the space frequency to 2295 Hz. Resistor R7 sets the Q of the Mark filter and R8 the Q of the Space filter. These filters are moderately broad (about 100 Hz) and will give ellipses as are shown in the photo. If you like narrower ellipses or even lines, increase the Q by increasing the values of R7 and R8. The Q is approximately equal to R7/R16 (Mark) and R8/R17 (Space). If the desired value of R7 and R8 is very high — like above 250K — it is a good idea to use an FET-input OP-AMP at U2 and U3 to minimize loading. There are many FET OP-AMP's available but the Motorola MC34002 and TIL082 have the same pin connections as the LM1458. Personally, I prefer the wider ellipse as it is also useful for shifts that aren't exactly 170 Hz — and I can "see them coming over a wider range" as I tune the receiver.

To align this circuit, preset R18 to the center of its range. Connect an audio oscillator to the

input, frequency set to 2125 Hz. Connect the vertical input of a time-swept scope to pin 1 of U1a. Reduce the oscillator signal level until the scope shows that the limiter is just barely clipping the sine wave. Adjust R18 to obtain symmetrical clipping of the sine wave. Now, set the audio input level up to between 0.1 and 1.0 V rms (not critical) and confirm that the frequency is set to exactly 2125 Hz. Your should see a horizontal ellipse on the RTTY Scope. Adjust the "X Gain" of the RTTY Scope to obtain an ellipse that is 3/4 the width of the CRT screen. Adjust control R19 on the M/S Filter to obtain the maximum CRT line length. Change the audio oscillator frequency to exactly 2295 Hz and adjust the RTTY Scope "Y Gain" for a 3/4-screen height vertical line. Adjust R20 on the M/S filter for maximum line length. That's all there is to it!

— 73, Bill, K9GWT

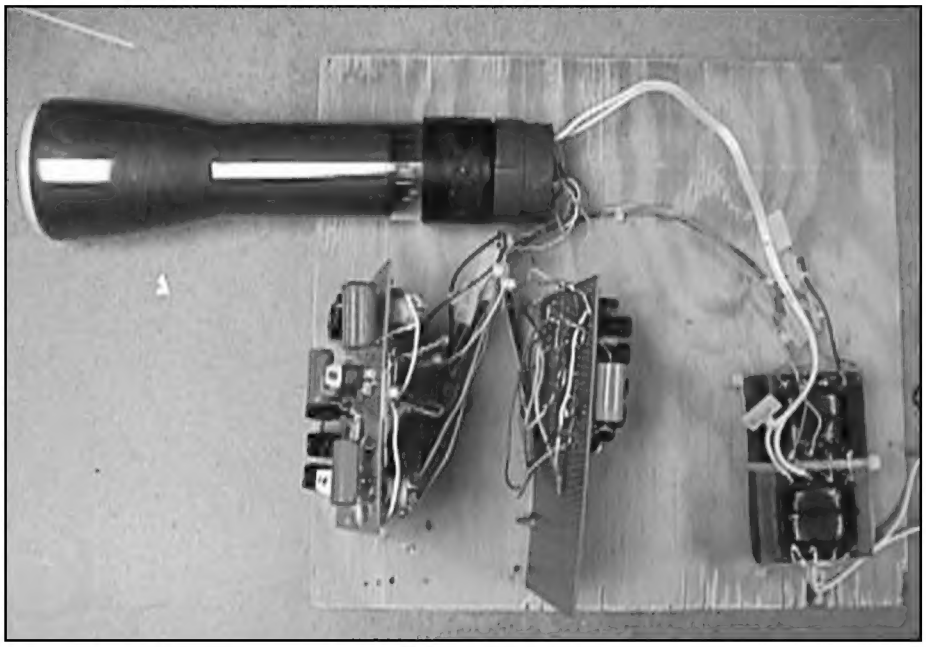

Figure 8: Completed Assembly

RTTY Scope Parts List

RTTY Scope Parts List

R-1, 2, 8, 9, 22	= 240K	1 Watt	(Mouser 294-240K)
R-3, 4, 10, 11	= 2.2K	1 Watt	(Mouser 294-2.2K)
R-5, 12	= 5.1K	1 Watt	(Mouser 294-5.1K)
R-6, 13	= 10K	1 Watt	(Mouser 294-10K)
R-7, 14	= 20K	1 Watt	(Mouser 294-20K)
R-15, 16	= 27K	1 Watt	(Mouser 294-27K)
R-17, 18	= 120K	1 Watt	(Mouser 294-120K)
R-19	= 270K	1 Watt	(Mouser 294-270K)
R-20	= 220K	1 Watt	(Mouser 294-220K)
R-21	= 6.8K	1 Watt	(Mouser 294-6.8K)
R-23	= 8.2K	1 Watt	(Mouser 294-8.2K)
C-1, 2, 3, 4, 7	= 0.1 mf	400 volt	(Digi-Key P1082-ND)
C-5, 6	= 100 mf	16 volt	(Digi-Key P5138-ND)
2N3904	= 2 each		(Digi-Key 2N3904-ND)
TIP50	= 4 each		(Mouser 333-TIP50)
Pots			
10K	= 4 each		(Mouser 31VA401)
100K	= 2 each		(Mouser 31VA501)
250K	= 1 each		(Mouser 31VA503)

Power Supply Parts List

R-1, 2, 3, 3	= 100 ohm	1 Watt	(Mouser 294-100)
C-1, 2	= 10 mf	450 volt	(Digi-Key P5344-ND)
C-3, 4, 5, 6	= 4.7 mf	450 volt	(Digi-Key P5343-ND)
C-7, 8, 9, 10	= 10 mf	450 volt	(Digi-Key P5344-ND)
C-11	= 2.2 mf	450 volt	(Digi-Key P5341-ND)
C-12, 14	= 1000 mf	25 volt	(Digi-Key P5156-ND)
C-13, 15	= 100 mf	35 volt	(Digi-Key P5166-ND)
Diodes			
1, 2, 3, 4, 5, 6, 7, 8, 9, 10	= 1N4007		(Digi-Key 1N4007GICT-ND)
11, 12, 13, 14	= 1N4005		(Digi-Key 1N4005GICT-ND)
T1, T2	= 2 ea.		(ALL Electronics PCTX-1216)
7912	= 1 each		(Mouser 512-MC7912CT)
7812	= 1 each		(Mouser 512-MC7812CT)

M/S Filter Parts List

R-1, 3, 12, 13, 14, 15	= 10K, 1/4W	(Mouser 291-10K)
R-2	= 100 ohm, 1/4W	(Mouser 291-100)
R-4	= 25K, 1/4W	(Mouser 291-25K)
R-5,6	= 7.5K, 1/4W	(Mouser 291-7.5K)
R-7,8	= 165,000 (1%, 1/4W)	(Mouser 271-165000)
R-9	= 43K, 1/4W	(Mouser 291-43K)
R-11	= 6490 (1%, 1/4W)	(Mouser 271-6490)
R-16	= 7500 (1%, 1/4W)	(Mouser 271-7500)
R-17	= 6980 (1%, 1/4W)	(Mouser 271-6980)
R-18	= 10K Trim Pot	(Digi-Key 3386F-103-ND)
R-19, 20	= 1.0K Trim Pot	(Digi-Key 3386F-102-ND)
C-1	= 0.1 mf, 100V Cer.	(Digi-Key BC1143CT-ND)
C-2, 3, 4, 5	= 10,000 pf, 2% Poly	(Digi-Key P3103-ND)
LM1458	= 1 each	(Digi-Key LM1458N-ND)

Biography

K4WW

Shelby Summerville, K4WW

Shelby was first licensed 21 years ago and he is 59 years young. He also has a son who is a ham and his call is KB4DOV. Shelby has been active in RTTY since 1997, spending 99.9% of his operating time in RTTY contesting and chasing DX. (Now that's dedication, Ed). He has won many awards mainly in state and some multi-op with his son.

Shelby is retired from TWA airlines where he spent many years as a baggage handler. He has been an avid bowler for over 40 years, giving it up recently after having lost interest. He has bowled a 300 game eight times in sanctioned league competition. The last ten years of his bowling career he averaged over 200 and highest of 226. Now that bowling is no longer in his blood, he has turned his attention to fishing when the weather cooperates.

When first licensed in 1981 he held the call KA4TAY, after upgrading to Advanced he changed his call to KI4DC. Shelby then upgraded to Extra and eventually in 1996 changed his call through the vanity call program to K4WW. He became interested in contesting after being associated with some of the multi-op operators of W4CN. During the 80's W4CN was very active in CW/SSB and held the 160 meter world record sponsored by 73 magazine. He is now the trustee of station W4CN.

Chasing DX came as a result of contesting. He found so many DX stations on during contesting that he just sort navigated to this sport. Now he is hooked. During those early days he accomplished 5BWAS, 5BDXCC, WAZ, WAC, all in mixed mode. Since joining the ranks of RTTY he has qualified for WAS, WAC, WAZ, and DXCC. Currently he has worked 268 and has 233 confirmed.

Shelby has received several certificates for different operations including a multi-op effort with G0AZT and W7VI from Reno, NV. This operation made it possible for many operators to contact this state.

As a property owner in a restricted area his station is rather modest. Living in a subdivision with 50X100 foot lot doesn't make for the best operating environment. He hopes future contests will create categories for such circumstances. His present station consists of TS-870, TS-850 (back-up), Ameritron AL-1200 Amp, Dentron MLA-2500 (back-up), Xmatch antenna tuner (constructed by a friend, N4XM).

Shelby has a Force-12 C3S mounted on a 65 foot tower with a dual band 80/160 meter inverted vee hung from the tower at 55 feet. He feels fortunate to have this antenna on such a small lot. He uses a Gateway 4DX2-50V computer, KamPlus TNC with host master software. However, for RTTY contesting he uses WF1B contest software. For CW/SSB contesting he uses NA.

Up-to-date Contest Information
http://www.rttyjournal.com/contests

RCKRtty
For Windows 95/98/2000/ME/NT
RTTY, PSK31, Pactor, AMTOR, and CW

- Normal QSO and Full Contest operation in all modes with one package
- Supports major RTTY, PSK31, CW, and SSB contests
- Supported TNCs: SCS-PTCx, AEA-x, KAM-x, MFJ-x, DSP-COM, HAL-Dx
- ★ ***NEW:*** Supports RTTY and PSK31 with PC soundcard
- Radio Control: Kenwood, ICOM, Yaesu
- Packet-Radio for DX-Cluster in same window
- ★ ***NEW:*** Waterfall display and spectrum analyzer
- Multilingual versions: English, Italian, Spanish, German, Dutch, Czech, Russian, Ukrainian, French
- Uses "friend.ini", "master.cal", "cty.dat"
- Powerful logging functions (edit, search, export...)
- Call, DXCC, State, CQ Zone, ITU Zone, WPX, and IOTA detection with automatic insertion
- Full contest operation with mouse
- Generate all contest reports
- Realtime QSO rates and other statistics
- Extensive documentation and Windows help file
- Free updates on the internet, e-mail reflector
- Many more features, write or e-mail for full details

Only $45

Walter Dallmeier, DL4RCK
Odenwaldstrasse 4
93173 Wenzenbach, Germany
FAX: +49 9407 957139
e-mail: dl4rck@rckrtty.de
http://www.rckrtty.de

Tubes, Tube Sockets, and Misc. Teletype Parts

TYPETRONICS
Fred G. Schmidt, N4TT
P.O. Box 8873
Ft. Lauderdale, FL 33310-8873
Phone: 954-583-1340
FAX: 954-583-0777

Biography W2UP

Barry Kutner, W2UP

I asked Barry Kutner, W2UP, to share with us his background and what follows is a brief description of his experiences with RTTY. We thank Barry for sharing this with us and we encourage others to do the same. Just write to me or e-mail me with your biography and we'll do our best to publish it here in the pages of the RTTY Journal. 73, Dale Sinner, W6IWO, 1904 Carolton Lane, Fallbrook, CA 92028, dsinner@tfb.com.

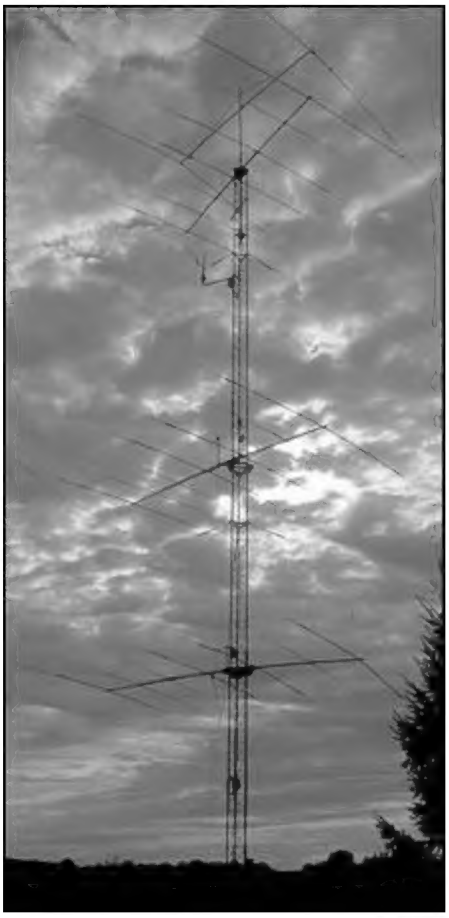

Barry was first licensed 32 years ago and has been active in RTTY off and on since the early seventies. His other hobbies include bicycling, skiing, and coin collecting. Currently, his station consists of a FT-1000D, FT990, and Acom 2000A amplifier. He has an array of antennas and has shared some pictures with us. The description of his antenna setup is a 160M inv vee @ 70 ft. Beverages 600ft to EU, 300 ft W. An 80 m 3 element sloper array (K8UR style). A 40m 2 element Yagi Cushcraft 402CD @ 86 ft. A 20-10m TH7/TH/TH7 @ 25/40/76 ft. The upper two are phased and the lower one is used with the second radio when operating SO2R.

Barry was originally exposed to RTTY in the early seventies while visiting a nearby ham (Bernie, W2IDX). This exposure did not excite him but he again came in contact with RTTY while in college. Here he operated the club station W2SZ with a model 15 and a homebrew TU. Again he didn't get too excited about RTTY because the noise of the machines always gave him a headache. Later on he learned of the AEA software for the Commodore C-64 in the early eighties. This time RTTY stuck without the headaches. Barry's special interests are contesting and DXing. Over the years he has settled in with contesting and DXing and was recently added to the RTTY DXCC Honor Roll with the submission of 3Y0C.

Some of his personal achievements:
1995 WPX 1st place World 49m
1996 WPX 1st place USA SO/HP
1993 RR 1st place Atlantic Division
2000 RR High score PSK31
2001 RR High score PSK31
1987 WAE 1st place NA
1988 WAE 1st place NA
1997 WAE 1st place USA
1993 BARTG 1st place World 40m
1994 BARTG 1st place World 40m
1990 SARTG 1st place World 40m
1992 SARTG 1st place World 40m
1996 SARTG 1st place World 40m
1991 CQWW 1st place USA SO
1992 CQWW 1st place World 40m
1993 CQWW 1st place World 40m
1995 CQWW 1st place World 40m
1997 CQWW 1st place World 40m
1998 CQWW 1st place NA SOA
1999 CQWW 1st place NA SOA
2000 CQWW 1st place World SO/LP
2001 NCJ RTTY Sprint 1st place

Barry has a B.S in Bioengineering and has a private practice as an M.D. in ophthalmology. He also enjoys high speed CW and his current speed is 75 WPM, down from 85-90 WPM in the early 70's, while in high school. He is 40 years of age and there are no other hams in the family.

2001 CQ/RJ WW DX Contest Plaque Winners and Sponsors

Single Operator High Power

World: CT9L (Op: DJ6QT)
Sponsor: HAL Communications Corp.

North America: TI5U (Op: JH8KYU)
Sponsor: W2JGR

USA: K4JA
Sponsor: W6OTC

South America: LV5V (Op: LU5VV)
Sponsor: HC8N

Oceania: ZL2AMI
Sponsor: N6TQS

Europe: TK5EP
Sponsor: K9JY

Asia: UP5P
Sponsor: K7VS

Single Operator Low Power

World: P40MM (Op: K3MM)
Sponsor: The New RTTY Journal

USA: AA5AU
Sponsor: W0ETC

South America: ZX2B (Op: PY2ML)
Sponsor: N6TQS

Africa: CN8NK
Sponsor: W6OTC

Europe: 9A6A
Sponsor: AA5AU

Asia: ZC4DW
Sponsor: KD6WW

Single Operator Assisted

World: KI1G
Sponsor: WA9ALS

USA: K4WW
Sponsor: K4WW

Europe: DL5AXX
Sponsor: KK5OQ

Multi-Op Single Transmitter High Power

World: HO1A (Ops: DJ7AA, DK1BT, DL7CM, HP1XVH)
Sponsor: CQ Magazine

Multi-Op Single Transmitter Low Power

World: Z37GBC (Ops: Z31GX, Z32PT, Z33F, Z36W
Sponsor: KP2N

North America: K1TTT (Ops: K1TTT, WM1K, WF1B, W1TO, N1XS)
Sponsor: K1TTT

Europe: YU7AL (Ops: YU7AL, YT7AW, YZ7EM)
Sponsor: K1TTT

Multi-Op Two Transmitter

World: HC8N (Ops: N5KO, K6AW, W6OTC)
Sponsor: WA9ALS

Asia: JH4UYB (Ops: JH4UYB, JL4NCF)
Sponsor: JA6BEY

Multi-Op Multi-Transmitter

World: IG9A (Ops: IT9GSF, YL2KL, YL2KA, YL2LY, YL3CW)
Sponsor: CQ Magazine

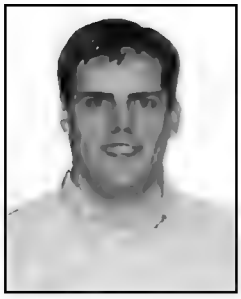

Website Reviews

Joe Wittmer, KB9SIZ
jwittmer@rttyjournal.com

Hi Group! We are back with the second series of World Wide Web Review articles with another navigation guide to some neat web resources. If you missed out on the first series of reviews. We took at look at several interesting sties including our own site, www.rttyjournal.com, Waldemar's RTTY World Ranking List, www.qsl.net/dk3vn, RTTY Info the successor to "All Things RTTY", www.rttyinfo.net, RTTY.Com a nice "Greenkeys website", and NOAA the National Oceanic and Atmospheric Administration, www.sec.noaa.gov. I hope you had fun browsing these sites and hopefully picked up some interesting tidbits along the way. Lets get ready to surf!

BARTG
• http://www.bartg.demon.co.uk

BARTG is the British Amateur Radio Teledata Group a not-for-profit organization dedicated to encourage and promote digital communication among amateurs. If you are a RTTY contester you are probably already familiar with BARTG and the sprint and spring RTTY contests. But, there is much more to BARTG than this. BARTG is a membership of digital gurus that are willing to give a helping hand. If you are interested in Packet, FAX, AMTOR, PACTOR, CLOVER and PSK31 or any of the other digital modes there is something here for you. In addition, BARTG membership includes a quarterly magazine of technical resources, tutorials, news, views, awards, and more.

Henry Minsky's Model 28
• http://www.ai.mit.edu/people/hqm/japan/teletype/

This website is a must see if you have some interest in the older equipment. Why? you ask. You can actually send a message to a Model 28 using a webpage! Henry has an interesting combination of a Linux server (daemon) running on a notebook and a Model 28 teleprinter. If you are really into this and want to know how this is done and are a C programmer, you can get the source code — for free! You can see Henry's Model 28 here as well.

Don Hill, AA5AU
• http://www.geocities.com/writelog

Don AA5AU's enthusiasm for RTTY contesting really shows on his contesting website and is must see for RTTY contests. Don does a fantastic job of posting setup details for the RTTY Contests. Here you will find examples for setting up buffers and other Big gun tips. When you are getting ready to setup for the contest, this is the place to look first. If you are using writelog, then the setup is easily borrowed. However, any of your favorite software tools can be used with this bulk of knowledge. One very nice resource is a very developed database of previously worked callsigns in RTTY Contests. If you are a contester, it is possibly a good idea to make sure you are on this list! The call sign database has quickly become a widely distributed resource.

Sigi, DJ3NG
• http://www.qsl.net/dj3ng/index1.html

Here is another site dedicated to RTTY Contesting. This new website is unique in that you can actively interact with the webpages by posting your contest scores. There are interfaces for easily browsing previous contests to see how other operators have done as well. The webpage is full of links and references to other nice RTTY resources on the worldwide web.

NEETS
• http://www.advancement.cnet.navy.mil/navigation/neetstitles.htm

NEETS stands for Navy Electricity and Electronics Training Series. This resource was put together as a group of nonresident self-study training courses. This is an excellent tool for elmering a new ham (or yourself). There are 24 separate (NEETS) Modules each having its own set of Chapters. Questions follow each section and there are Answers to each question to check your work. There many module topics from matter and energy, amplifiers, propagation, wave shaping, radar, fiber optics, and much more. Each separate module is individually downloadable in pdf format. Again, this is an excellent teach yourself guide to many aspects of electronic principles and theory. You may even wish to distribute this among your non-ham friends and relatives and spark some interest in this amazing hobby of ham radio.

Well RTTY friends I hope you have found this second installment of Website reviews interesting. As always if you find something you think others in the group would enjoy, please pass it along.

Remember... learning is not a race and there is no finish line.

— 73, Joe KB9SIZ

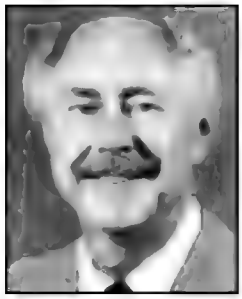

Dayton 2002 Update

Dale Sinner, W6IWO
dsinner@rttyjournal.com

The Dayton Hamvention dates are getting real close and if you have not secured a room yet, now is the time. Those dates are May 17, 18 and 19. This year the gang will be staying at the Howard Johnson Inn on I-75 which is about 8 miles from the airport and 10 from the arena. The room rate is only $85 per night and comes with a continental breakfast each morning. They have a nice lounge and meeting room where we will have our dinner catered for the low price of $17 per plate. The hotel has 24 hour service to and from the airport and will be providing a van for our use to go back and forth to the arena. However, the Dayton Convention Bureau is also going to provide bus service to the arena and will be stopping at our hotel. There may be a small price for this service which has yet to be decided. So come join us at the Howard Johnson Inn. Here are some more details on what will take place over this weekend.

Upon our arrival Thursday evening many of us will meet in the hotel lounge for and eyeball and highball. This has been a tradition for many years and always finds the room filled with RTTY gossip, lies, and some truths. It will be a fun evening.

On Friday morning, it's off to the arena for a day of exciting shopping both in the swap meet area and the halls of the convention center. Back at the hotel in the evening we join again for our famous hospitality suite where everyone meets again to discuss the happenings of the day.

Saturday morning it's back to the arena early for the RTTY forum. Many of you have already made some comments regarding this forum on the thread here recently. So here's your chance to voice your opinions in a collective setting. Don't miss this forum!!

Saturday night will be our annual banquet. As far as we've been able to tell, this will be our 25th year of having a banquet. It will be a special occasion not only for this reason but also we will have Doug Faunt, N6TQS, as our speaker. Doug will have a slide program of his travels to the various DX locations he has visited in the last few months. There will also be contest winners plaques presentations sometime during this evening. This will be a fun filled evening again and hopefully you'll all come and enjoy the great food and the camaraderie.

Sunday some of us will head home while others of us will be back to the arena for one last look and to maybe make a last minute purchase.

There you have it. A great weekend with great friends. There is still time to secure a room but time keeps marching on. Soon all room sales will be closed, so don't hesitate another moment — make that commitment today! To secure your room, just go to the www.rttyjournal.com web page and click on Dayton 2002, then simply follow the instructions. I'll see to it you get a room and the rest will be fun for you.

See you there.

— 73, Dale Sinner, W6IWO

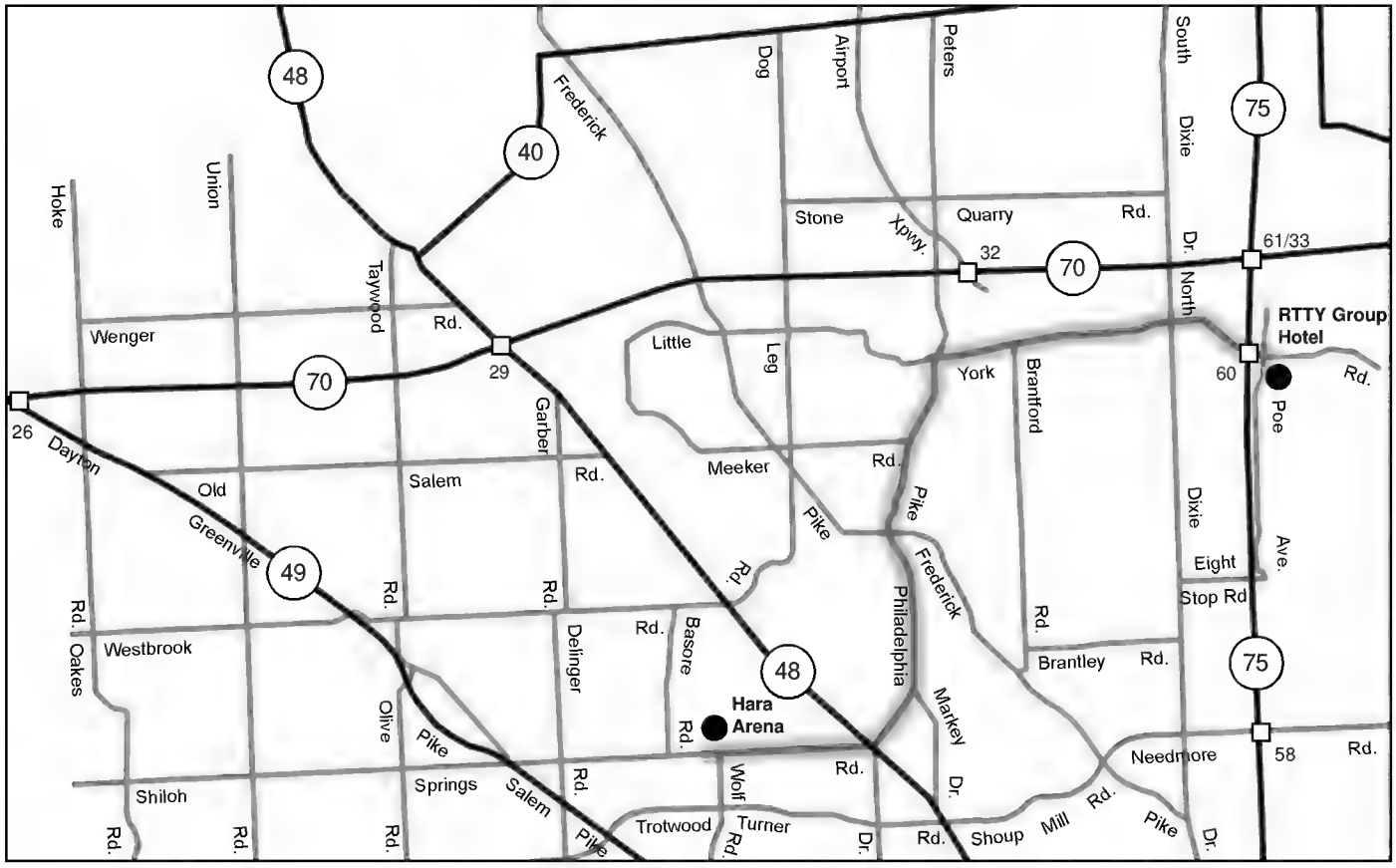

Armed Forces Day Anniversary Military/Amateur Crossband Communications Test

May 11, 2002

The Army, Air Force, Navy, Marine Corps, and Coast Guard are co-sponsoring the annual military/amateur radio communications tests in celebration of the 52nd Anniversary of Armed Forces Day. Although the actual Armed Forces Day is celebrated on Saturday, May 18, 2002, the Armed Forces Day Military and Amateur Crossband Communications Test will be conducted on May 11, 2002 (local) so as not to conflict with the Dayton Hamvention which is on the same weekend (17-19 May, 2002) as the actual Armed Forces Day.

The annual celebration features traditional military to amateur cross band communications test and the message receiving test. These tests give Amateur Radio operators and short wave listeners an opportunity to demonstrate their individual technical skills and receive recognition from the Secretary of Defense or the appropriate military radio station for their proven expertise.

QSL cards will be provided to those making contact with the military stations. Special commemorative certificates will be awarded to anyone who receives copies the digital Armed Forces Day message from the Secretary of Defense.

Military-to-Amateur Cross Band Test Contacts:

Military-to-Amateur cross band operations will take place during 11-12 May 2002. Times in Zulu (UTC) and frequencies for each station are listed below. Voice contacts will include operations in single sideband voice (SSB). Some stations may not operate the entire period, depending on propagation and manning. Participating military stations will transmit on selected Military MARS frequencies and listen for amateur radio stations in the Amateur bands indicated below. The military station operator will announce the specific amateur band frequency being monitored. Duration of each voice contact should be limited to 1-2 minutes. The following stations will be transmitting on MARS frequencies listed below which are provided as 'Window/Dial Frequency' in kHz.

Station: AAZ
(11 May 1300Z - 12 May 0400Z)

Frequency	Emission	Amateur Band
4038.0 kHz	LSB	80M
6913.0 kHz	LSB	40M
7424.0 kHz	USB	40M
13741.5 kHz	USB	20M
13910.5 kHz	USB	20M
13993.0 kHz	USB	20M
24760.0 kHz	USB	15M
27788.5 kHz	USB	10M

Location: Fort Huachuca, AZ
Address:
HQ USASC
ATTN: AFSC-OPE-MA (MARS)
Ft. Huachuca, AZ 85613-5000

POC: Mr. William McNab DSN: 821-7324 or Com: (520) 533-7324

Station: AEA
(11 May 0700Z - 1900Z)

Frequency	Emission	Amateur Band
6999.0	LSB	40M

Location: Edingen, Germany
Address:
43rd Signal Battalion
Attn: European MARS Gateway Station
AEM1USA/AEA CMR 420, Unit 29228
APO, AE 09014, USA

POC: Sgt Phillip Ayers, NCOIC DSN (314) 370-8332 or COM: +49-(0)6221-57-8332.

Station: AIR
(11 May 1200Z - 12 May 0400Z)

Frequency	Emission	Amateur Band
4026.5 kHz	LSB	80M
6894.5 kHz	USB	40M
7316.5 kHz	LSB	40M
13985.0 kHz	USB	20M
13996.0 kHz	USB	20M

Location: Andrews AFB, DC
789CS/SCP
Andrews AFB DC 20762-6116

53rd Annual International DX Convention

International DX Convention 2DX2 Visalia, California, USA

Sponsored by the Southern California DX Club (SCDXC)

April 26, 27, & 28, 2002
Visalia, California

Exhibits & displays
Seminars
Banquets
Prize drawings

Contact Herb Rosenberg, KG6OK for more information: 714-516-9100 or kg6ok@pacbell.net.

http://www.qsl.net/visalia2002

WriteLog for Windows with Rttyrite/WinRTTY/AFC

One Package Handles All Your CW, SSB, and RTTY Contesting Needs

NEW Version 10 for Windows 95, 98, NT

Operate 2 radios with one sound card on RTTY and SSB & Perfect CW transmission.

Tired of obsolete DOS logging packages that force you to use special configurations and don't use all of the power of your computer? WriteLog is the first contest logging software designed to fully deliver the convenience and ease of use of Windows 95, 98 & NT.

WriteLog includes these battle-proven features:

- Work RTTY using any 16-bit (or better) sound card. No other hardware required! Opt. 2 sound cards and run 4 radios
- Full Radio Control
- Helpful Band Map
- Packet Interface
- Fast Ethernet Networking
- Super Check Partial
- Click and Go Mouse Support
- Perfect Log Submission
- Two Radio Support
- Supports All Major Contests in All Modes
- **Only $75.00** Ver 9 users upgrade $30.

PLUS These NEW Features:

- RTTY mode AFC — also known as Autotune
- Audio Compression — now you can save & play back your entire log after a contest, contact by contact, from WAV files on your H.D. — in CW, SSB, RTTY & PSK31 modes — via WAV file compression.
- CW Reader - print CW on screen like in a RTTY contest. We also added multi-channel CW reader capability. With a fast PC (350MHz Pentium or faster) WriteLog will decode CW at 6 different pitches on 2 radios simultaneously. Like having a backup operator looking over your shoulder.

"I made the first contest (non RTTY) with WriteLog, and it is FANTASTIC. It is such an improvement for me over CT... I really love it, and from now on anyone who operates from here will HAVE to use this program! I will twist their arms." — John, ON4UN

http://www.writelog.com
e-mail:k5dj@writelog.com
Ron Stailey, K5DJ
504 Dove Haven Dr.
Round Rock, TX 78664-5926
Tel: (512) 255-5000

POC: Mr Van Evans, DSN 858-4746 or comm 301 981 4746

Station: AIR-2
(11 May 1500Z - 12 May 0300Z)

Frequency	Emission	Amateur Band
4488.5 kHz	USB	80M
6994.5 kHz	USB	40M
13983.5 kHz	USB	20M
14387.5 kHz	USB	20M
27983.5 kHz	USB	10M

Location: Nellis AFB, NV

POC: Mr Ken Johnson

Station: AIR-3
(11 May 1800Z - 12 May 0600Z)

Frequency	Emission	Amateur Band
4023.5 kHz	USB	80M
7358.5 kHz	USB	40M
14528.5 kHz	USB	20M
20873.0 kHz	USB	10M

Location: Hilo, HI

POC: Maj Harvey Motomura

Station: NAV
(11 May 1200Z - 12 May 0200Z)

Frequency	Emission	Amateur Band
4010.0 kHz	RTTY/LSB	80M
7348.0 kHz	RTTY/LSB	40M
14478.5 kHz	RTTY/USB	20M
20994.0 kHz	RTTY/USB	15M

Location: Williamsburg, VA

Address:
HQ NAVMARCORMARS Radio Station
Cheatham Annex Bldg 117
108 Sanda Ave
Williamsburg, VA 23185-8830

POC: Bo Lindfors, DSN 953-4494, COM: (757) 887-4494

Station: NAV-2
(11 May 1200Z - 12 May 0400Z)

Frequency	Emission	Amateur Band
4016.5 kHz	LSB	80M
7366.5 kHz	LSB	40M
14470.0 kHz	USB	20M
20678.5 kHz	USB	15M

Location: Charleston, SC

Address:
1050 Remount Road Bldg 3231
Charleston, SC 29406-3542

POC: ITC(SW) Gerald Hood, DSN: 563-0370, COM: (803) 743-0370

Station: NAV-3
(11 May 1200Z - 112 May 0400Z)

Frequency	Emission	Amateur Band
4014.0 kHz	LSB	80M
7394.5 kHz	LSB	40M
13974.0 kHz	USB	20M
20997.0 kHz	USB	15M

Location: Corpus Christi, TX

Address:
NAVMARCORMARS Radio Station
9035 Ocean Drive Suite 3A
Corpus Christi, TX 78419-5234

POC: Mr. Bently Owens, COM: (225) 622-3267

Station: NAV-4
(11 May 1200Z - 12 May 0400Z)

Frequency	Emission	Amateur Band
4011.5 kHz	LSB	80M
7376.5 kHz	LSB	40M
14467.0 kHz	USB	20M
21758.5 kHz	USB	15M

Location: Great Lakes, IL

Address:
NAVMARCORMARS Radio Station
615 Preble Avenue
Camp Barry Bldg 153
Great Lakes, IL 60088-2850

POC: Mr. Dave Ouellette, DSN: 792-3787, COM: (847) 688-3787

Station: NBL
(11 May 1200Z - 12 May 0400Z)

Frequency	Emission	Amateur Band
4041.5 kHz	LSB	80M
7371.5 kHz	LSB	40M
14391.5 kHz	USB	20M
20623.5 kHz	USB	15M

Location: Groton, CT

Address:
NAVMARCORMARS Radio Station
PO Box 161 Naval Submarine Base
Groton, CT 06349-5161

POC: Gerard Scarano, DSN: 694-2061/3716 or COM: (860) 694-2061/3716

Station: NPL
(11 May 1200Z - 12 May 0400Z)

Frequency	Emission	Amateur Band
4003.0 kHz	LSB	80M
7351.5 kHz	LSB	40M
14463.5 kHz	USB	20M
20936.0 kHz	USB	15M

Location: San Diego, CA

Address:
NAVMARCORMARS Radio Station
937 North Harbor Drive
San Diego, CA 92132-5100

POC: ITC(SW) Craig Williams, DSN: 522-1490, COM: (619) 532-1490

Station: WAR
(11 May 1200Z - 12 May 1200Z)

Frequency	Emission	Amateur Band
4020.0 kHz	LSB	80M
6910.0 kHz	LSB	40M
7363.0 kHz	LSB	40M
13512.5 kHz	USB	20M
14928.5 kHz	USB	20M
20518.5 kHz	USB	15M

Location: Ft Detrick, MD

Address:
Commander, 1110th Signal Battalion
1671 Nelson Street
ATTN: MARS Station Bldg 1678
Ft Detrick, MD 21702

POC: Mr. Barry F. Thaysen, DSN: 343-3654 or Com: (301) 619-3654

Station: WUG-231
(12 May 1300Z - 13 May 0600Z)

Frequency	Emission	Amateur Band
4032.0 kHz	LSB	80M
6826.0 kHz	LSB	40M
14486.0 kHz	USB	20M
14663.5 kHz	USB	20M
20973.5 kHz	USB	15M

Location: Memphis, TN

Address:
USACE Memphis District Office
ATTN: Jim Pogue
Public Affairs Office Room B-202
167 N. Main St.

Memphis, TN 38103-1894

POC: Mr. Jim Pogue, Com: 901)544-4109

Secretary of Defense Message Test via Digital Modes:

The Secretary of Defense message will be transmitted via digital modes including RTTY, PACTOR, AMTOR, and CLOVER from the stations listed below, including frequencies, mode, and date/time in Zulu (UTC). All frequencies are listed for center of intelligence. Offset as appropriate for your TNC. (Note: Not all stations may necessarily operate on all the frequencies listed, depending on propagation and available equipment.)

Station: AAZ
(HQ Army MARS and Western Area Gateway, Fort Huachuca, AZ)
Frequency Mode Broadcast Date/Time
6988.0 kHz RTTY 12 May/0230Z
PACTOR FEC 12 May/0310Z
CLOVER 12 May/0340Z
24761.5 kHz RTTY 12 May/0230Z
PACTOR FEC 12 May/0310Z
CLOVER 12 May/0340Z

Station: AEA
(European Army MARS GW Station, Edingen, Germany)
Frequency Mode Broadcast Date/Time
5401.0 kHz PACTOR FEC 11 May/1700Z

Station: AIR
(Andrews AFB MARS station, Washington DC)
Frequency Mode Broadcast Date/Time
13986.5 RTTY 11 May/2340Z
6995.5 RTTY 12 May/0240Z

Station: NAV
(HQ NAVMARCORMARS Radio Station, Washington, DC)
Frequency Mode Broadcast Date/Time
7346.5 kHz RTTY 11 May/2340Z
AMTOR FEC 12 May/0010Z
CLOVER FEC 12 May/0040Z
14480.0 kHz RTTY 11 May/2340Z
AMTOR FEC 12 May/0010Z
CLOVER FEC 12 May/0040Z

Station: NAV-2
(NAVMARCORMARS Radio Station, Charleston, SC)
7365.0 kHz RTTY 11 May /2340Z
PACTOR FEC 12 May/0010Z
AMTOR FEC 12 May/0040Z
14471.5 kHz RTTY 11 May/2340Z
PACTOR FEC 12 May/0010Z
AMTOR FEC 12 May/0040Z

Station: NAV-4
(NAVMARCORMARS Radio Station, Great Lakes, IL)
7375.0 kHz RTTY 12 May/0240Z
PACTOR FEC 12 May/0310Z
AMTOR FEC 12 May/0340Z
14468.5 kHz RTTY 12 May/0240Z
PACTOR FEC 12 May/0310Z
AMTOR FEC 12 May/0340Z

Station: NBL
(NAVMARCORMARS Radio Station, Groton, CT)
7370.0 kHz RTTY 11 May /2340Z
PACTOR FEC 12 May/0010Z
AMTOR FEC 12 May/0040Z
14393.0 kHz RTTY 11 May/2340Z
PACTOR FEC 12 May/0010Z
AMTOR FEC 12 May/0040Z

Station: NPL
(NAVMARCORMARS Radio Station, San Diego, CA)
7350.0 kHz RTTY 12 May/0240Z
PACTOR FEC 12 May/0310Z
AMTOR FEC 12 May/0340Z
14465.0 kHz RTTY 12 May/0240Z
PACTOR FEC 12 May/0310Z
AMTOR FEC 12 May/0340Z

Station: NUW
(NAVMARCORMARS Radio Station, NAS Whidbey Island, WA)
7380.0 kHz RTTY 12 May/0240Z
PACTOR FEC 12 May/0310Z
AMTOR FEC 12 May/0340Z
13530.0 kHz RTTY 12 May/0240Z
PACTOR FEC 12 May/0310Z
AMTOR FEC 12 May/0340Z

Station: WAR
(ARMY MARS Eastern Area Gateway Station,
Fort Detrick, MD
6988.0 kHz PACTOR 11 May/2340Z
RTTY (Note #1) 12 May/0010Z
CLOVER 12 May/0040Z
14440.0 kHz AMTOR FEC 11 MAY/2340Z
PACTOR 12 MAY/0010Z
CLOVER 12 MAY/0040Z

Note #1: 170 Hz shift at 45 Baud.

Submission of Test Entries:

Transcripts of the RTTY, PACTOR, AMTOR or CLOVER receiving test should be submitted "as received". No attempt should be made to correct possible transmission errors. Provide time, frequency and call sign of the military station copied, including name, call sign, and address (including ZIP code) of individual submitting the entry. Ensure this information is placed on the paper containing the test message. Each year a large number of acceptable entries are received with insufficient information, or necessary information was attached to the transcriptions and was separated, thereby precluding issuance of a certificate. Entries must be sent to the following military address as follows:

A. Stations copying AAZ, AEA, or WAR send entries to:
Armed Forces Day Celebration
Chief, Army MARS
HQ, USASC
ATTN: AFSC-OPE-MA (MARS)
Fort Huachuca, AZ 85613-5000

B. Stations copying NAV, NAV-2, NAV-4, NBL, NPL or NUW send entries to:
Armed Forces Day Celebration
Chief, Navy-Marine Corps MARS
Cheatham Annex Bldg 117
108 Sanda Ave
Williamsburg, VA 23185-5830

C. Stations copying AIR send entries to:
Armed Forces Day Celebration
Chief Air Force MARS
C/O Mr Van Evans
789CS/SCP
Andrews AFB DC 20762-6116

WT4I Contest Tools

Tools to analyze and check Cabrillo format logs

Now you can use the same software used by Official Contest Managers to check logs and expedite production of accurate and timely contest results!

WT4I Log Checker - Get a look at your log in a different view than what is provided by most contest logging programs. The user can easily spot bad or busted calls and missed or bad exchanges. The individual user is given the opportunity to look at the log in much the same way as an official log checker.

Cabrillo Converter - Convert just about any column based ASCII log into the Cabrillo format. The user simply identifies each of the columns through simple clicks of the mouse, enters the required header information, and saves the log in Cabrillo format. The resultant log is ready for log checking with WT4I Log Checker or for electronic submission.

Master Call Maintenance - Create and maintain your own master callsign database for use with WriteLog, WF1B RTTY, or with the WT4I Log Checker utility. The user can build a master callsign database from existing super check partial files, or build one semi-automatically from the callsigns found in Cabrillo format logs.

- Cabrillo Format Logs
- 30+ Major Contests
- Automatic Scoring
- Dupe Checking
- Unique +1 Processing
- Search and Replace
- Check 10 Minute Rule
- Check 6 Band Change
- Display Off Times
- View Log by Field

WT4I Contest Tools $40 **Cabrillo Converter $20**

http://www.wt4i.com
e-mail: sales@CabrilloTools.com
Ron Stailey, K5DJ
504 Dove Haven Drive
Round Rock, TX 78664-5926
Tel: (512) 255-5000

Next Contest, Work the Weak Ones

- Rugged and portable aluminum cabinet
- Unique Crossed-X tuning indicator displays M/S in FSK and CLOVER, and frequency center in all modes

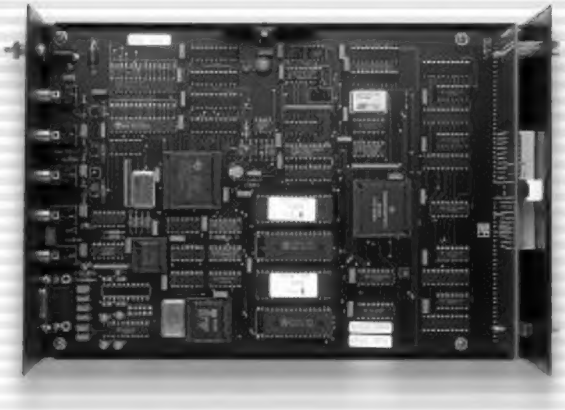

- DSP filtering and Motorola microprocessor control
- Flash memory for easy software and firmware updates

- Connects to computer with a standard DB9 serial cable
- Radio connections made easy with phono connectors

DXP38 DSP HF Radio Modem

Modes: CLOVER-II, RTTY, AMTOR, P-MODE

Everything bad can and does happen to your HF signals, especially during a contest. Selective fading, noise, interference, and poor tuning indicators all conspire to let that rare DX get away. Track it down with the DXP38.

The DXP38 modem provides advanced digital signal processing the other do-everything analog designs can t. You can t work the rare ones if your modem can t copy them. The DXP38 will!

HAL COMMUNICATIONS CORP.
1201 West Kenyon Road, P.O. Box 365
Urbana, IL 61801-0365
Phone: (217) 367-7373 FAX (217) 367-1701
www.halcomm.com halcomm@halcomm.com